ROOF REPLACEMENT AT THE
NCDOT DIVISION & TRAFFIC SERVICES OFFICE
558 GILLESPIE STREET
FAYETTEVILLE, NORTH CAROLINA
GL: 52199012, COST CENTER:150538
SCO ID: 14-11317-01A

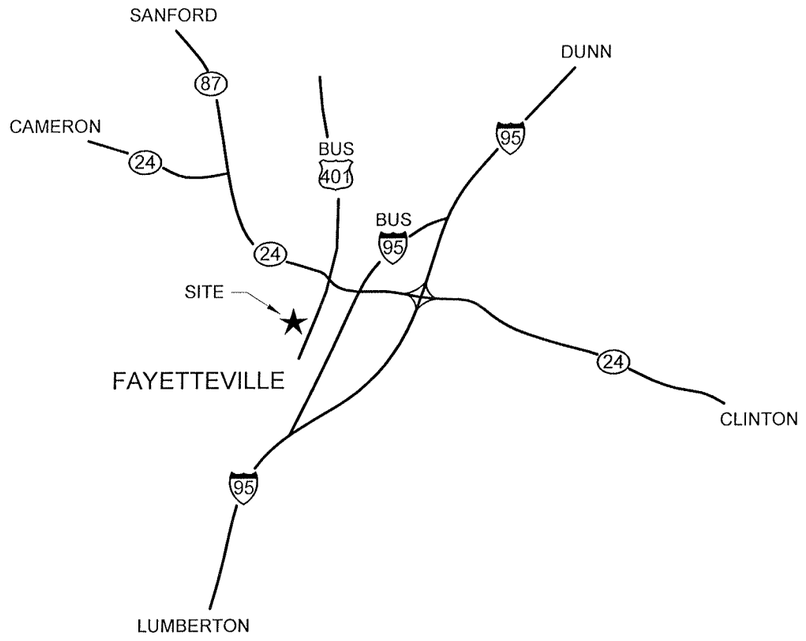

VICINITY MAP

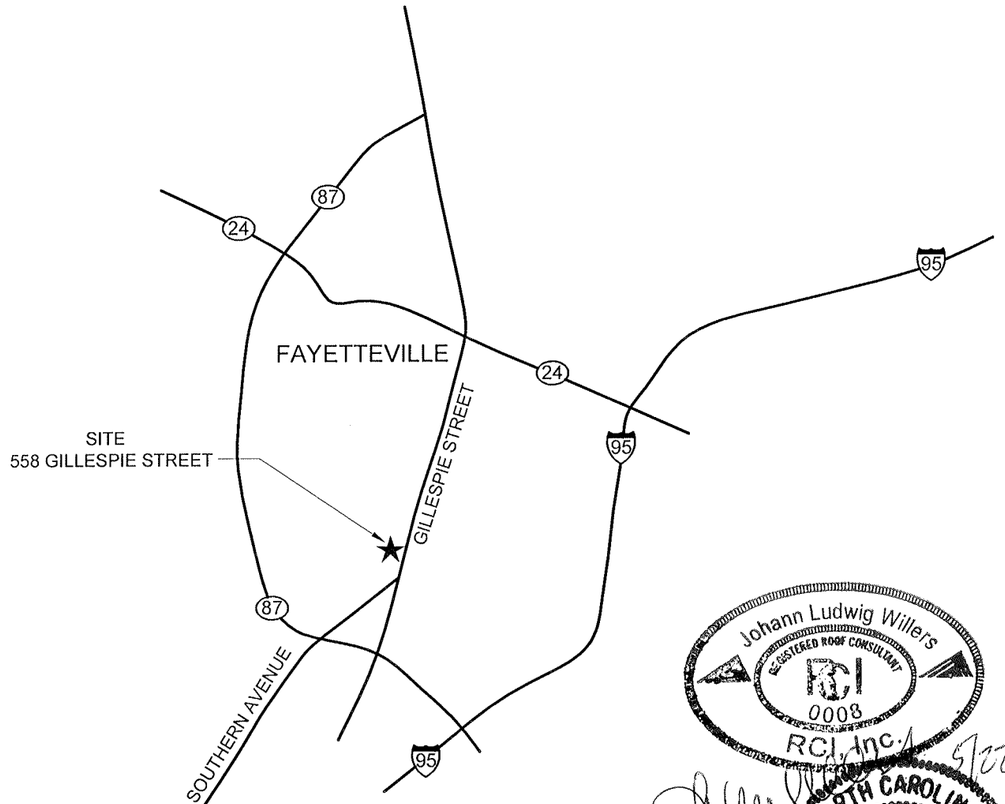

LOCATION MAP

"NEITHER ROOFTOP SYSTEMS ENGINEERS, P.C., NOR ITS EMPLOYEES, NOR SUBCONSULTANTS ARE RESPONSIBLE FOR THE ACTS OR OMISSION OF ANY CONTRACTOR, SUBCONTRACTOR, OR MATERIAL SUPPLIER; FOR SAFETY PRECAUTIONS, PROGRAMS OR ENFORCEMENT; OR FOR CONSTRUCTION MEANS, METHODS, TECHNIQUES, SEQUENCES, AND PROCEDURES EMPLOYED BY THE CONTRACTOR."

Johann Ludwig Willers
REGISTERED ROOF CONSULTANT
RCI
0008
RCI, Inc.
5/22/15
NORTH CAROLINA
PROFESSIONAL
SEAL
11102
ENGINEER
JOHANN LUDWIG WILLERS

DRAWN BY:	ACS
CHECKED BY:	JW
DATE	5/22/15
JOB NO.	14-069
SCALE:	NONE
SHEET	1 OF 18

ROOFTOP SYSTEMS ENGINEERS, P.C.
316 W. MILLBROOK ROAD, SUITE 201
RALEIGH, NC 27609-4482
NC License No. C-0807
919-872-7866; 919-872-4486 fax
www.rse-pc.com

Roof Plan

ROOF REPLACEMENT AT THE
NCDOT DIVISION & TRAFFIC SERVICES OFFICE
558 GILLESPIE STREET
FAYETTEVILLE, NORTH CAROLINA
GL: 52199012,COST CENTER: 150538
SCO ID: 14-11317-01A

5/22/2015 - 3:27:00 pm - K:\Projects\Fayetteville\Drawings\Arch\Roof Plan.dwg

LEGEND

- PIPE PENETRATION
- VENT ON CURB (SEE DETAIL 17)
- SLOPE OF TAPERED INSULATION
- GUTTER/DOWNSPOUT
- HIP/RIDGE/VALLEY
- VENTILATOR
- CURBED FAN
- SKYLIGHT
- THROUGH-WALL SCUPPER

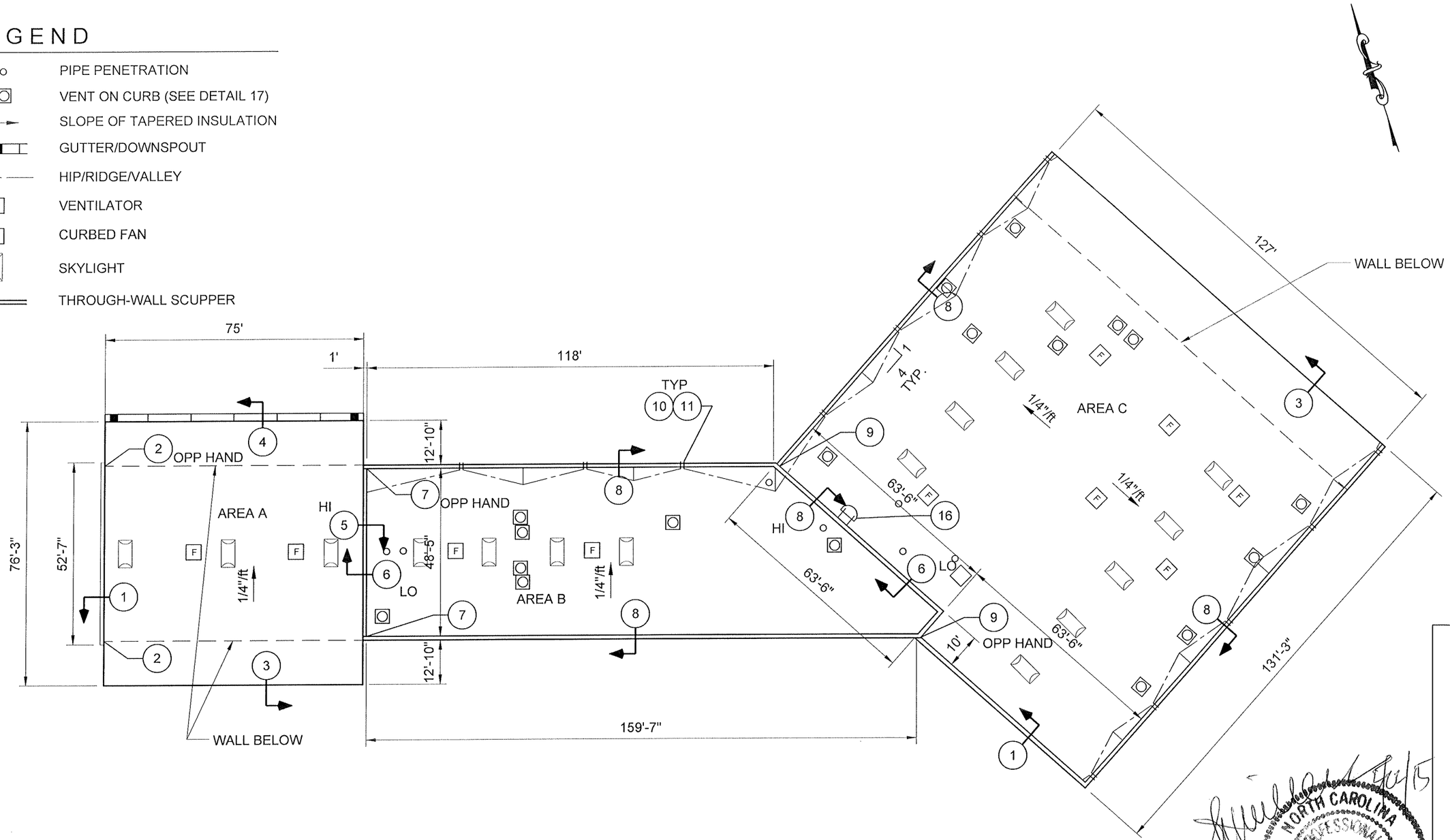

ROOF PLAN

0 30' 60' 90'

NOTES:
1. VERIFY ALL DIMENSIONS

Johann Ludwig Willers
REGISTERED ROOF CONSULTANT
RCI
0008
RCI, Inc.

NORTH CAROLINA
PROFESSIONAL
SEAL
11102
ENGINEER
JOHANN LUDWIG WILLERS

DRAWN BY: ACS	JOB NO. 14-069
CHECKED BY: JW	SCALE: 1"=30'-0"
DATE 5/22/15	SHEET 2 OF 18

ROOFTOP SYSTEMS ENGINEERS, P.C.
316 W. MILLBROOK ROAD, SUITE 201
RALEIGH, NC 27609-4482
NC License No. C-0807
919-872-7866; 919-872-4486 fax
www.rse-pc.com

Roof Plan

ROOF REPLACEMENT AT THE
NCDOT DIVISION & TRAFFIC SERVICES OFFICE
558 GILLESPIE STREET
FAYETTEVILLE, NORTH CAROLINA
GL: 52199012,COST CENTER: 150538
SCO ID: 14-11317-01A

ASCE 7-05

WIND UPLIFT RESISTANCE REQUIREMENTS

1. ZONE 1 - 17.97 psf (FIELD)
2. ZONE 2 - 30.16 psf (PERIMETER)
3. ZONE 3 - 45.39 psf (CORNERS)

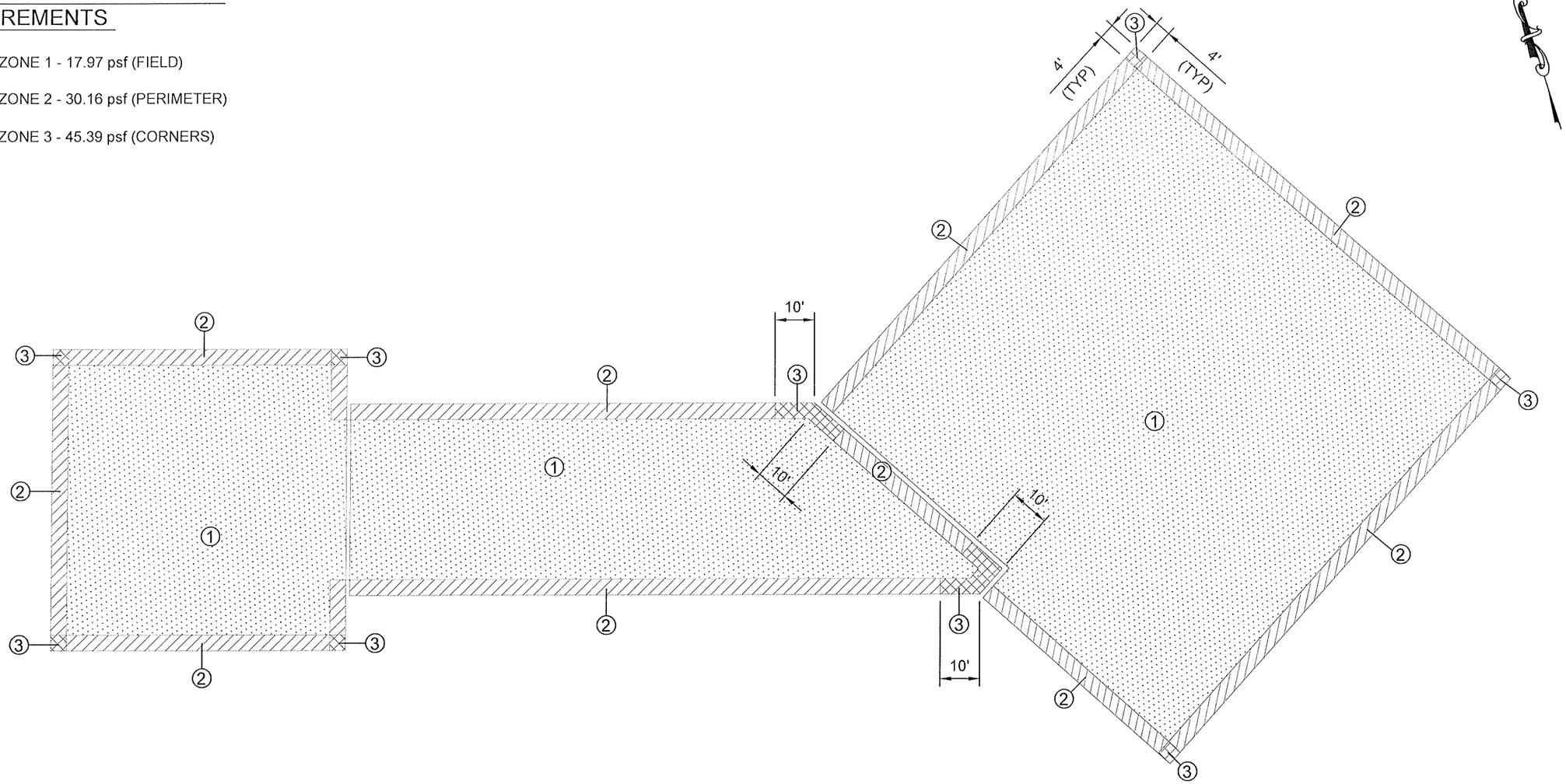

WIND UPLIFT PLAN

0 30' 60' 90'

Johann Ludwig Willers
REGISTERED ROOF CONSULTANT
RCI
0008
RCI, Inc.

NORTH CAROLINA PROFESSIONAL SEAL 11102 ENGINEER JOHANN LUDWIG WILLERS

5/22/15

JOB NO.	14-069
SCALE:	1"=30'-0"
SHEET	3 OF 18
DRAWN BY:	ACS
CHECKED BY:	JW
DATE	5/22/15

ROOFTOP SYSTEMS ENGINEERS, P.C.
316 W. MILLBROOK ROAD, SUITE 201
RALEIGH, NC 27609-4482
NC License No. C-0807
919-872-7866; 919-872-4486 fax
www.rse-pc.com

Wind Uplift Plan

ROOF REPLACEMENT AT THE
NCDOT DIVISION & TRAFFIC SERVICES OFFICE
558 GILLESPIE STREET
FAYETTEVILLE, NORTH CAROLINA
GL: 52199012,COST CENTER: 150538
SCO ID: 14-11317-01A

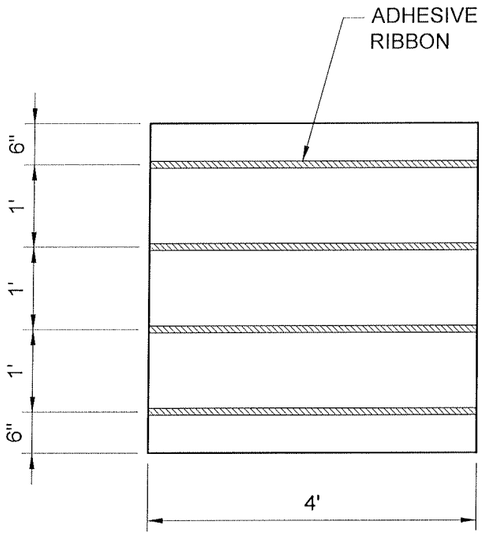

FIELD

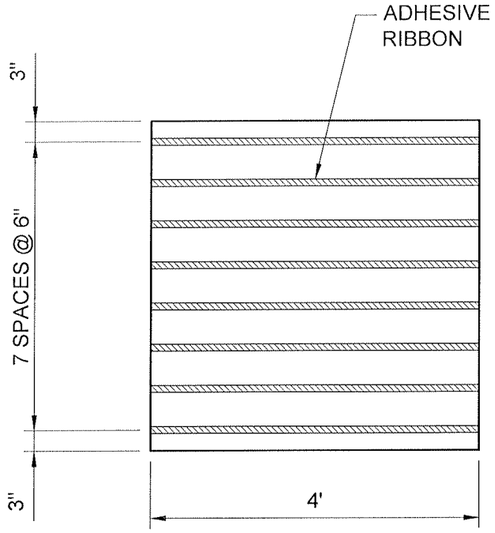

PERIMETER

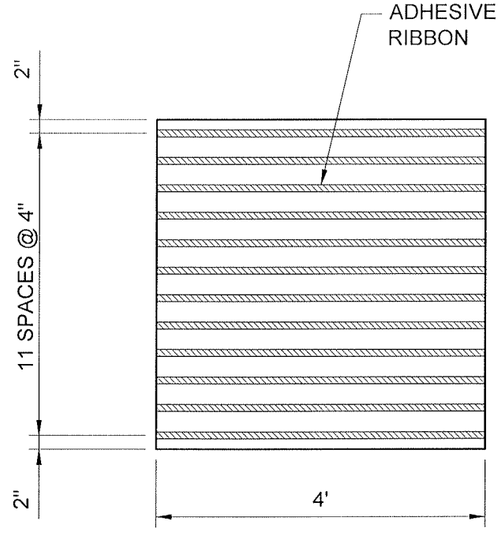

CORNER

NOTE: SEE SHEET 3 FOR UPLIFT ZONES
(ADHESIVE PATTERNS SHOWN ARE MINUMUM, INCREASE AS REQUIRED BY MEMBRANE MANURACTURER)

Johann Ludwig Willers
CERTIFIED ROOF CONSULTANT
RCI
0008
RCI, Inc.

NORTH CAROLINA
PROFESSIONAL
SEAL
11102
ENGINEER
JOHANN LUDWIG WILLERS

5/22/15

DRAWN BY: ACS	JOB NO. 14-069		
CHECKED BY: JW	SCALE: AS NOTED		
DATE 5/22/15	SHEET 4 OF 18		

ROOFTOP SYSTEMS ENGINEERS, P.C.
316 W. MILLBROOK ROAD, SUITE 201
RALEIGH, NC 27609-4482
NC License No. C-0807
919-872-7866; 919-872-4486 fax
www.rse-pc.com

Minimum Adhesive Application Pattern

ROOF REPLACEMENT AT THE
NCDOT DIVISION & TRAFFIC SERVICES OFFICE
558 GILLESPIE STREET
FAYETTEVILLE, NORTH CAROLINA
GL: 52199012,COST CENTER: 150538
SCO ID: 14-11317-01A

5/22/2015 1:21pm - kraves - C:\Users\kraves\acadata\local\temp\AcPublish_8348\445-486 Details.dwg

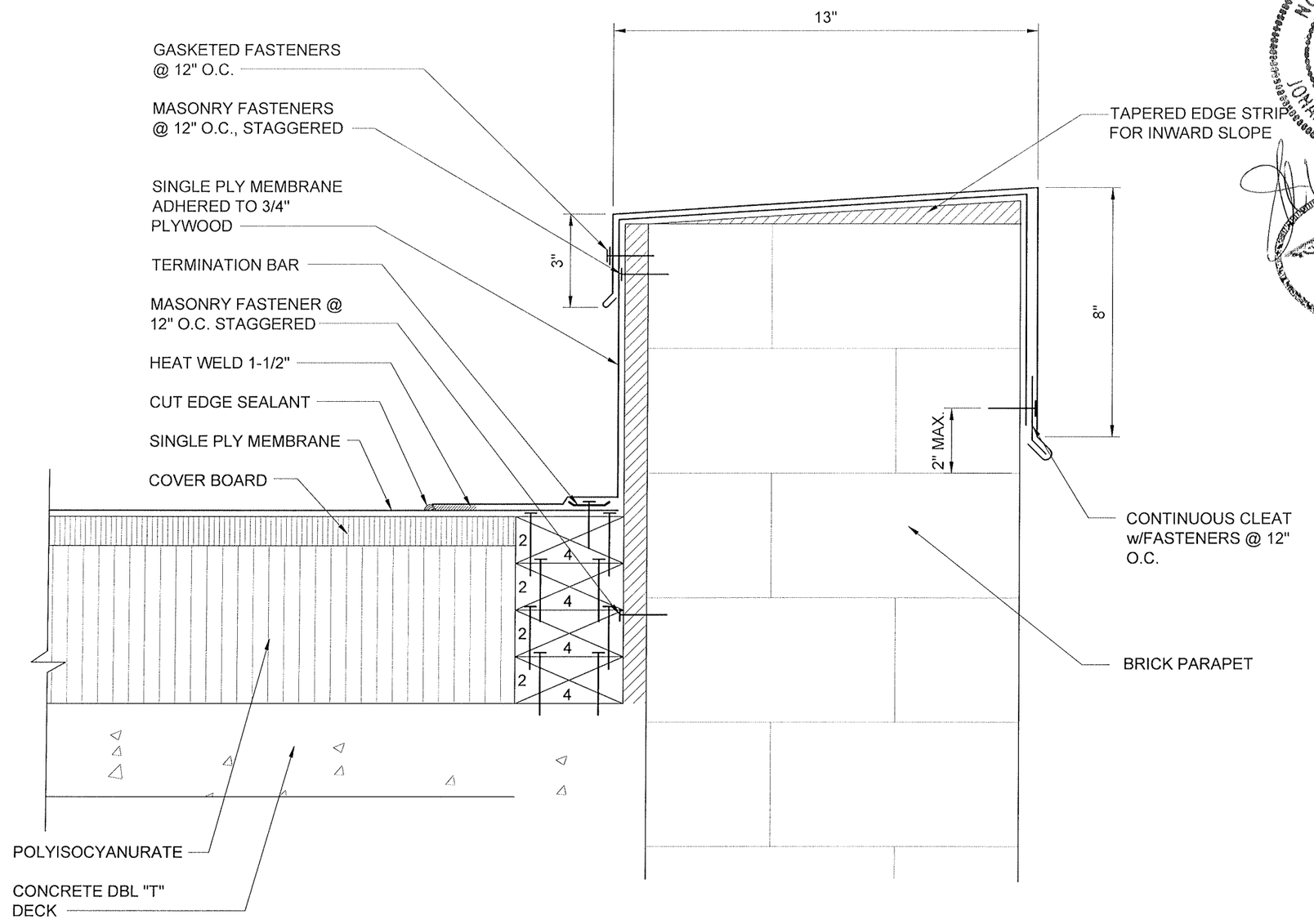

1 BRICK PARAPET DETAIL

SCALE: 3"=1'-0"

NORTH CAROLINA PROFESSIONAL SEAL 11102 ENGINEER JOHANN LUDWIG WILLERS

5/22/15

Johann Ludwig Willers REGISTERED ROOF CONSULTANT RCI 0008 RCI, Inc.

DRAWN BY:	ACS
CHECKED BY:	JW
DATE	5/22/15
JOB NO.	14-069
SCALE:	3"=1'-0"
SHEET	5 OF 18

ROOFTOP SYSTEMS ENGINEERS, P.C.
316 W. MILLBROOK ROAD, SUITE 201
RALEIGH, NC 27609-4482
NC License No. C-0807
919-872-7866; 919-872-4486 fax
www.rse-pc.com

1 Parapet Detail

ROOF REPLACEMENT AT THE
NCDOT DIVISION & TRAFFIC SERVICES OFFICE
558 GILLESPIE STREET
FAYETTEVILLE, NORTH CAROLINA
GL: 52199012,COST CENTER: 150538
SCO ID: 14-11317-01A

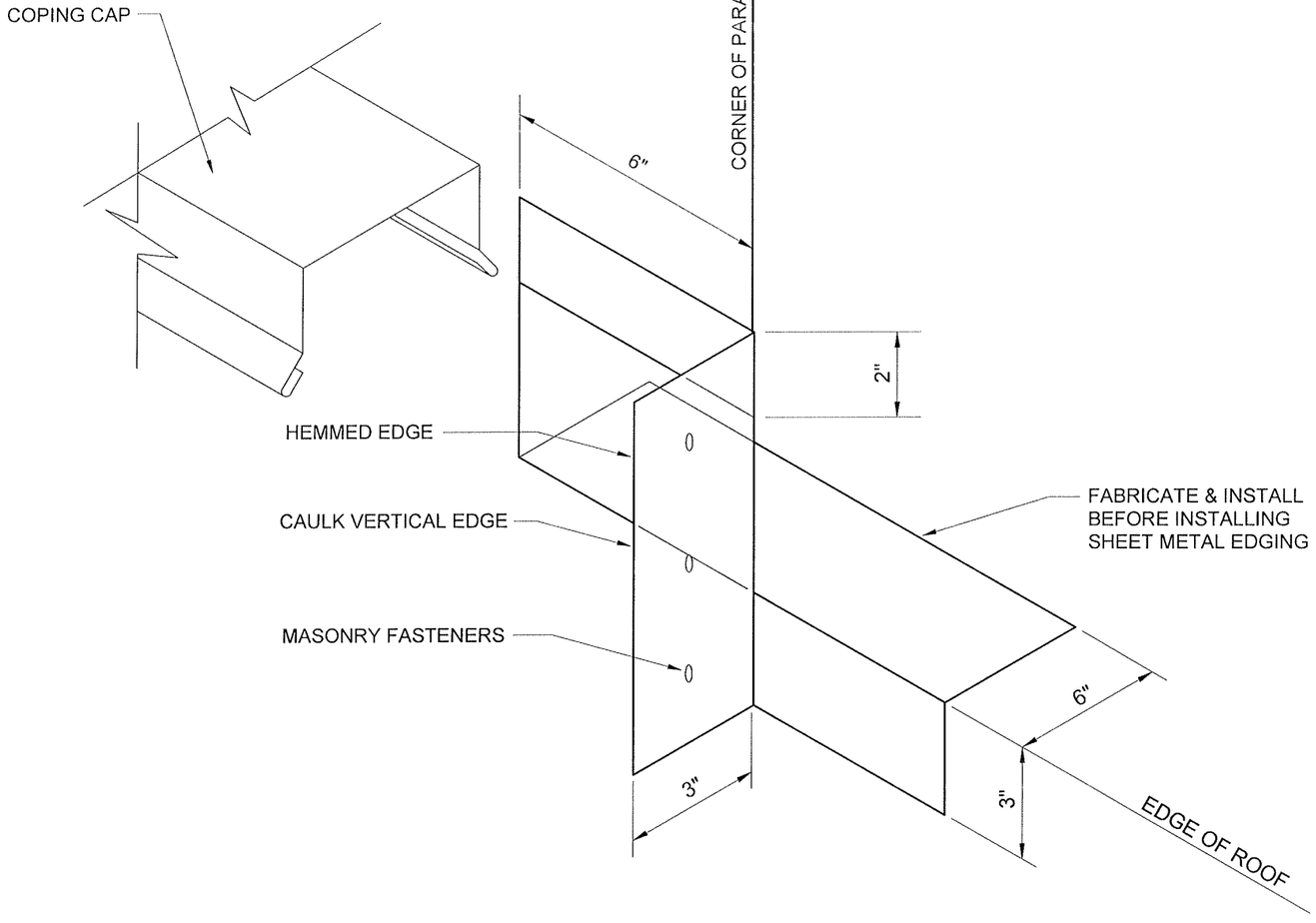

NOTES:

1. ALL SEAMS TO BE POP RIVETED AND SEALED.

2 ISOMETRIC AT INSIDE CORNER

SCALE: 3"=1'-0"

Johann Ludwig Willers
REGISTERED ROOF CONSULTANT
RCI
0008
RCI, Inc.

NORTH CAROLINA
PROFESSIONAL
SEAL
11102
ENGINEER
JOHANN LUDWIG WILLERS

5/22/15

JOB NO.	14-069
SCALE:	3"=1-0"
SHEET	6 OF 18
DRAWN BY:	ACS
CHECKED BY:	JW
DATE	5/22/15

ROOFTOP SYSTEMS ENGINEERS, P.C.
316 W. MILLBROOK ROAD, SUITE 201
RALEIGH, NC 27609-4482
NC License No. C-0807
919-872-7866; 919-872-4486 fax
www.rse-pc.com

2 Isometric at Inside Corner

ROOF REPLACEMENT AT THE
NCDOT DIVISION & TRAFFIC SERVICES OFFICE
558 GILLESPIE STREET
FAYETTEVILLE, NORTH CAROLINA
GL: 52199012,COST CENTER: 150538
SCO ID: 14-11317-01A

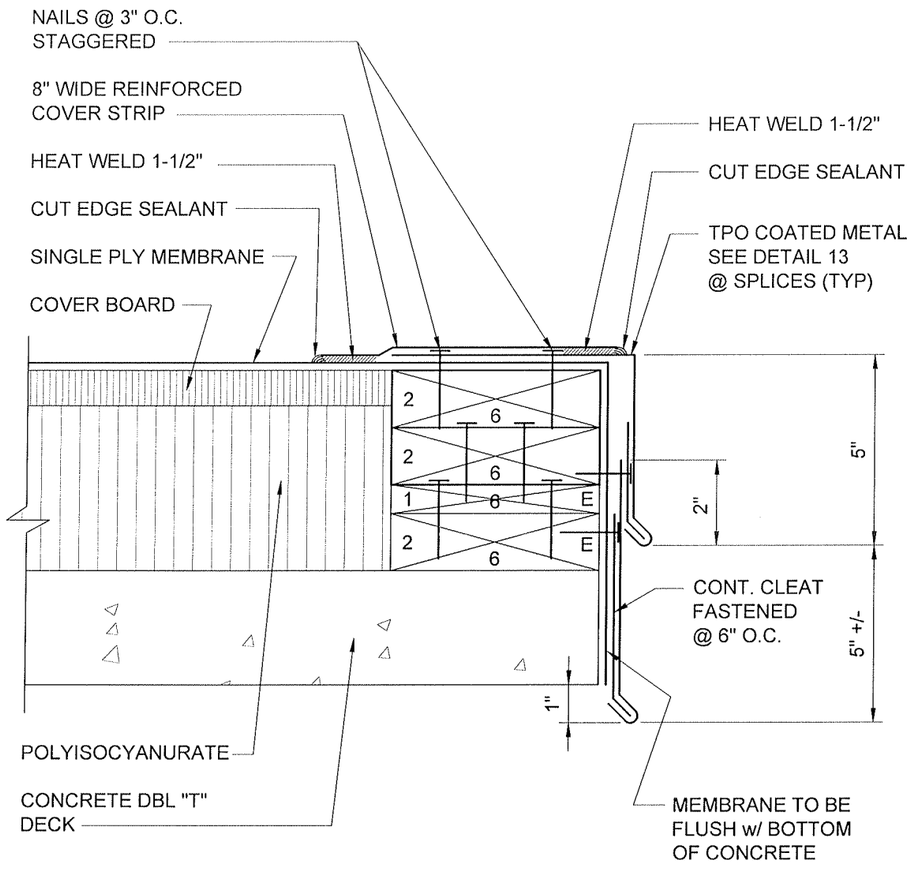

3 EDGE DETAIL

SCALE: 3"=1'-0"

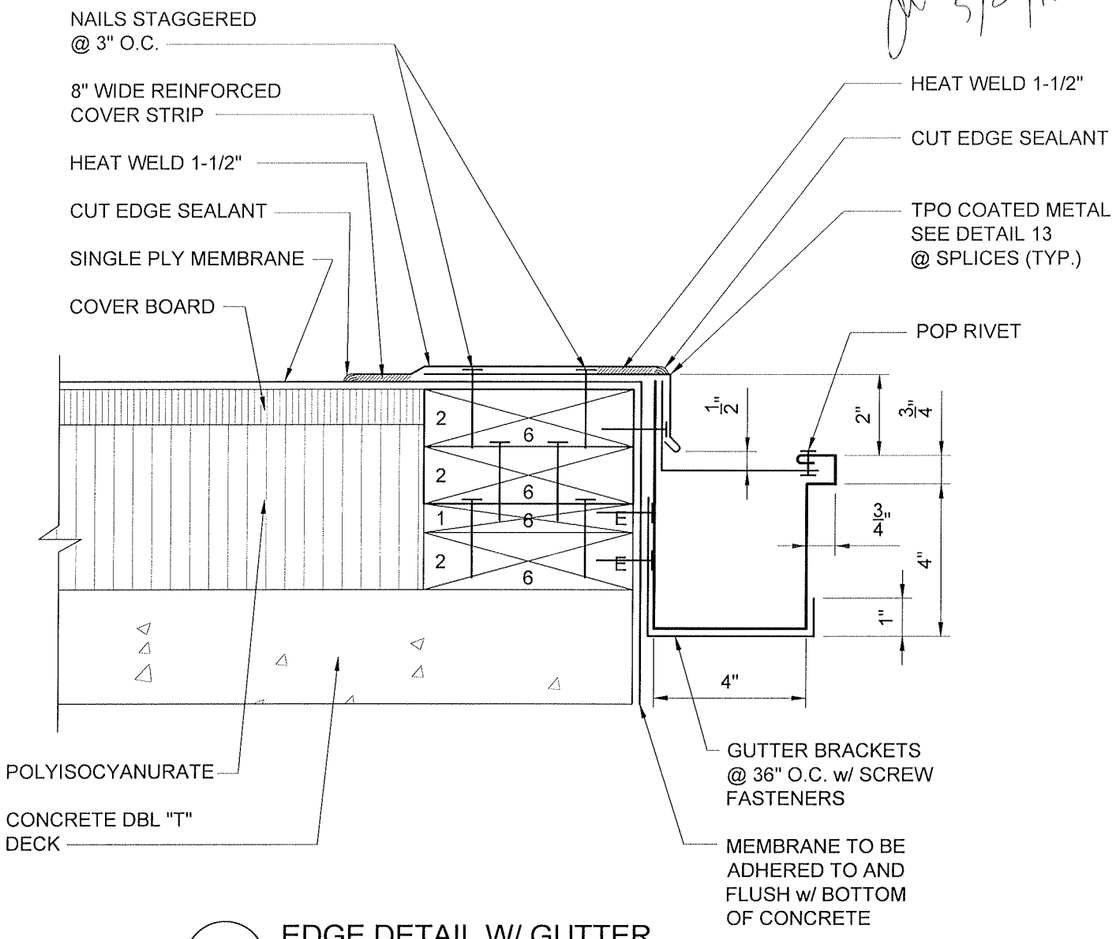

4 EDGE DETAIL W/ GUTTER

SCALE: 3"=1'-0"

Johann Ludwig Willers
ROOFTOP SYSTEMS CONSULTANT
0008
RCI, Inc.

NORTH CAROLINA
PROFESSIONAL
SEAL
11102
ENGINEER
JOHANN LUDWIG WILLERS

5/22/15

DRAWN BY: ACS	JOB NO. 14-069		
CHECKED BY: JW	SCALE: NONE		
DATE 5/22/15	SHEET 7 OF 18		

ROOFTOP SYSTEMS ENGINEERS, P.C.
316 W. MILLBROOK ROAD, SUITE 201
RALEIGH, NC 27609-4482
NC License No. C-0807
919-872-7866; 919-872-4486 fax
www.rse-pc.com

3 Edge Detail 4 Edge Detail w/Gutter

ROOF REPLACEMENT AT THE
NCDOT DIVISION & TRAFFIC SERVICES OFFICE
558 GILLESPIE STREET
FAYETTEVILLE, NORTH CAROLINA
GL: 52199012,COST CENTER: 150538
SCO ID: 14-11317-01A

05/22/2015 1:21:pm - knoves - C:\Users\knoves\appdata\local\temp\AcPublish_8948\... 448-486_Details.dwg

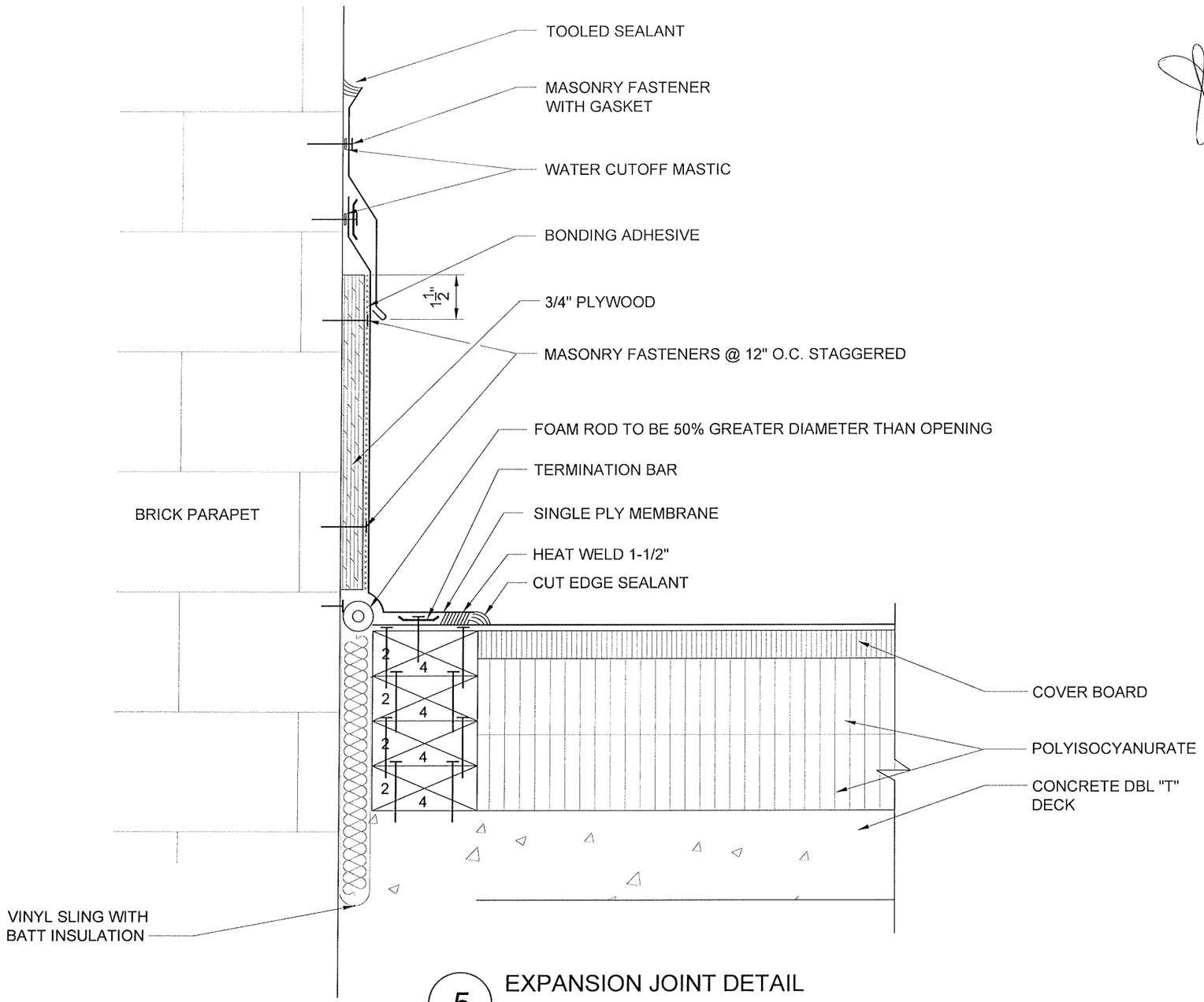

5 EXPANSION JOINT DETAIL

SCALE: NONE

NORTH CAROLINA PROFESSIONAL SEAL 11102 ENGINEER JOHANN LUDWIG WILLERS

Johann Ludwig Willers REGISTERED ROOF CONSULTANT RCI 0008 RCI, Inc.

5/22/15

DRAWN BY: ACS	JOB NO. 14-069
CHECKED BY: JW	SCALE: 3"=1-0"
DATE 5/22/15	SHEET 8 OF 18

ROOFTOP SYSTEMS ENGINEERS, P.C.
316 W. MILLBROOK ROAD, SUITE 201
RALEIGH, NC 27609-4482
NC License No. C-0807
919-872-7866; 919-872-4486 fax
www.rse-pc.com

5 Flashing at Wall Detail

ROOF REPLACEMENT AT THE
NCDOT DIVISION & TRAFFIC SERVICES OFFICE
558 GILLESPIE STREET
FAYETTEVILLE, NORTH CAROLINA
GL: 52199012,COST CENTER: 150538
SCO ID: 14-11317-01A

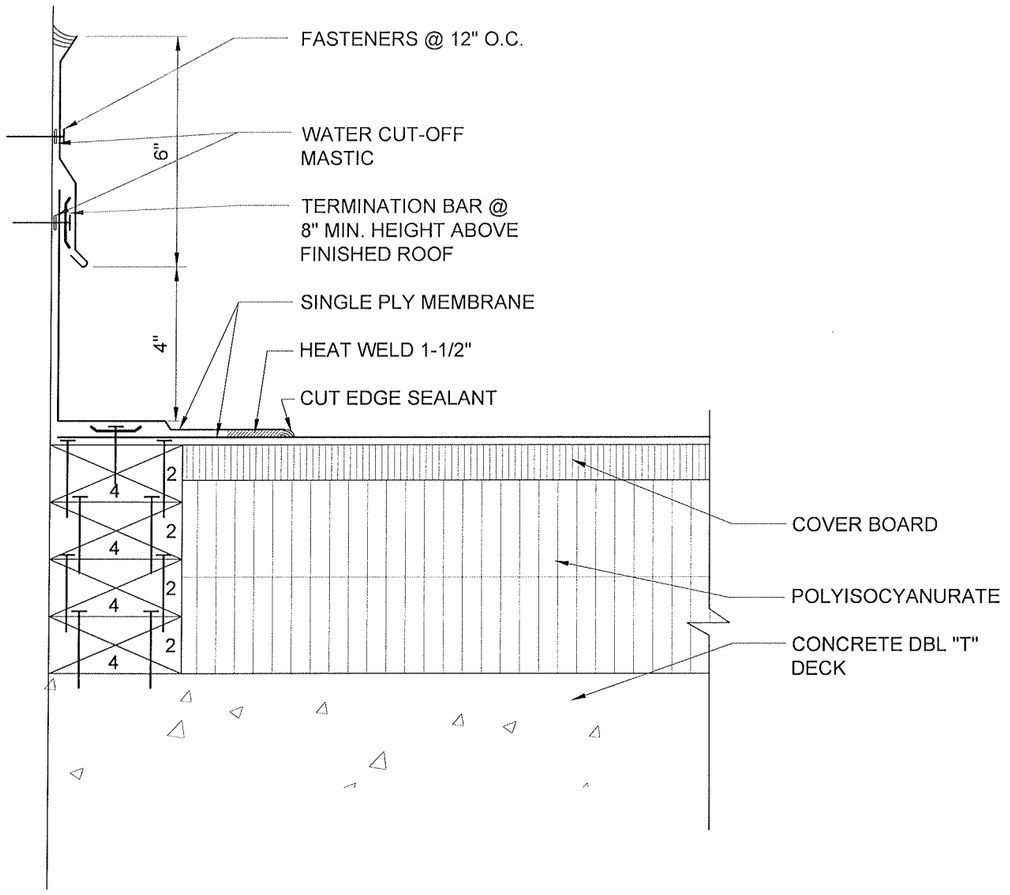

6 ROOF TO BRICK WALL DETAIL

SCALE: NONE

NORTH CAROLINA PROFESSIONAL SEAL 11102 ENGINEER JOHANN LUDWIG WILLERS

Johann Ludwig Willers REGISTERED ROOF CONSULTANT RCI 0008 RCI, Inc.

5/22/15

DRAWN BY: ACS	JOB NO. 14-069
CHECKED BY: JW	SCALE: 3"=1-0"
DATE 5/22/15	SHEET 9 OF 18

ROOFTOP SYSTEMS ENGINEERS, P.C.
316 W. MILLBROOK ROAD, SUITE 201
RALEIGH, NC 27609-4482
NC License No. C-0807
919-872-7866; 919-872-4486 fax
www.rse-pc.com

6 Flashing Deail

ROOF REPLACEMENT AT THE
NCDOT DIVISION & TRAFFIC SERVICES OFFICE
558 GILLESPIE STREET
FAYETTEVILLE, NORTH CAROLINA
GL: 52199012,COST CENTER: 150538
SCO ID: 14-11317-01A

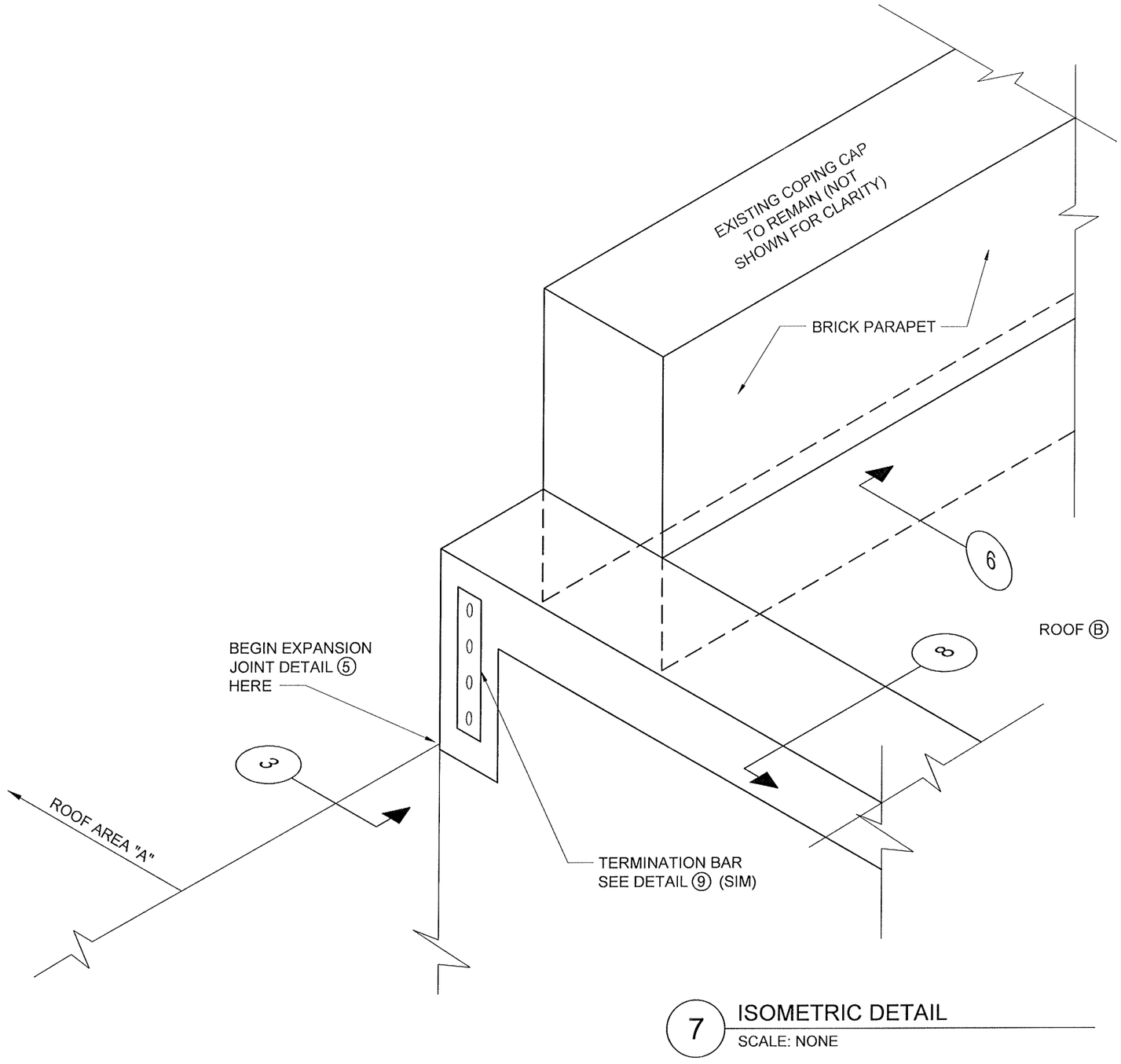

NOTES:
1. EXTEND COPING CAP DETAIL ⑫ TO END OF PRE-CAST CONCRETE PARAPET.
2. WRAP INTERFACE OF PRE-CAST CONCRETE PARAPET AND BRICK PARAPET WITH MEMBRANE DOWN TO ROOF.

7 ISOMETRIC DETAIL
SCALE: NONE

NORTH CAROLINA PROFESSIONAL SEAL 11102 ENGINEER JOHANN LUDWIG WILLERS

Johann Ludwig Willers REGISTERED ROOF CONSULTANT RCI 0008 RCI, Inc.

5.22.15

DRAWN BY: ACS	JOB NO. 14-069
CHECKED BY: JW	SCALE: 3"=1'-0"
DATE 5/22/15	SHEET 10 OF 18

ROOFTOP SYSTEMS ENGINEERS, P.C.
316 W. MILLBROOK ROAD, SUITE 201
RALEIGH, NC 27609-4482
NC License No. C-0807
919-872-7866; 919-872-4486 fax
www.rse-pc.com

7 Isometric Detail

ROOF REPLACEMENT AT THE
NCDOT DIVISION & TRAFFIC SERVICES OFFICE
558 GILLESPIE STREET
FAYETTEVILLE, NORTH CAROLINA
GL: 52199012,COST CENTER: 150538
SCO ID: 14-11317-01A

05/22/2015 1:21:pm - krowes - C:\Users\krowes\appdata\local\temp\AcPublish_8948\448--486_Details.dwg

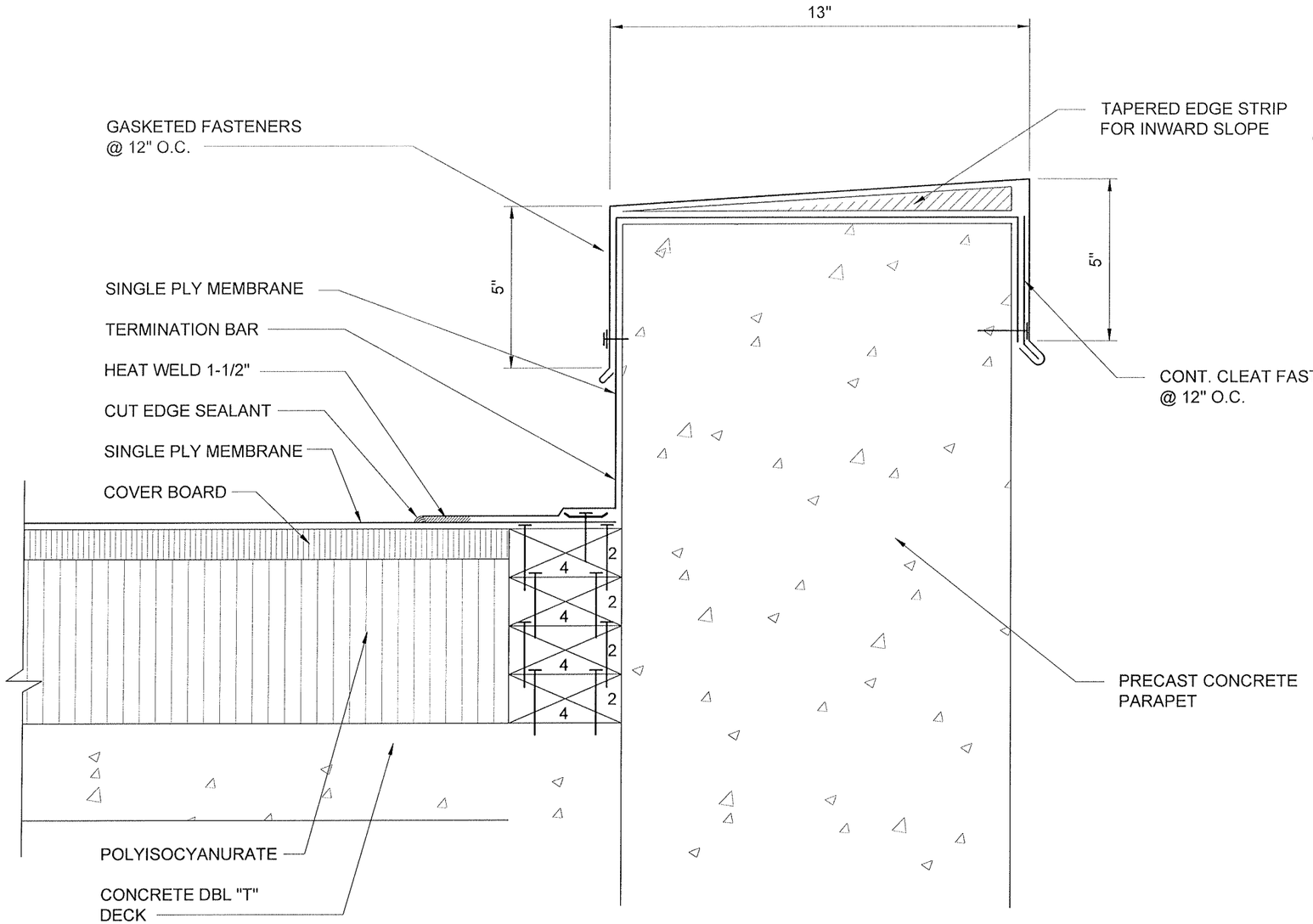

8 PARAPET DETAIL

SCALE: 3"=1'-0"

NORTH CAROLINA PROFESSIONAL SEAL 11102 ENGINEER JOHANN LUDWIG WILLERS

Johann Ludwig Willers REGISTERED ROOF CONSULTANT RCI 0008 RCI, Inc.

5/22/15

JOB NO.	14-069
SCALE:	3"=1'-0"
SHEET	11 OF 18
DRAWN BY:	ACS
CHECKED BY:	JW
DATE	5/22/15

ROOFTOP SYSTEMS ENGINEERS, P.C.
316 W. MILLBROOK ROAD, SUITE 201
RALEIGH, NC 27609-4482
NC License No. C-0807
919-872-7866; 919-872-4486 fax
www.rse-pc.com

8 Parapet Detail

ROOF REPLACEMENT AT THE
NCDOT DIVISION & TRAFFIC SERVICES OFFICE
558 GILLESPIE STREET
FAYETTEVILLE, NORTH CAROLINA
GL: 52199012,COST CENTER: 150538
SCO ID: 14-11317-01A

05/22/2015 1:21pm - khayes - C:\Users\khayes\appdata\local\temp\AcPublish_8948_448-486_Details.dwg

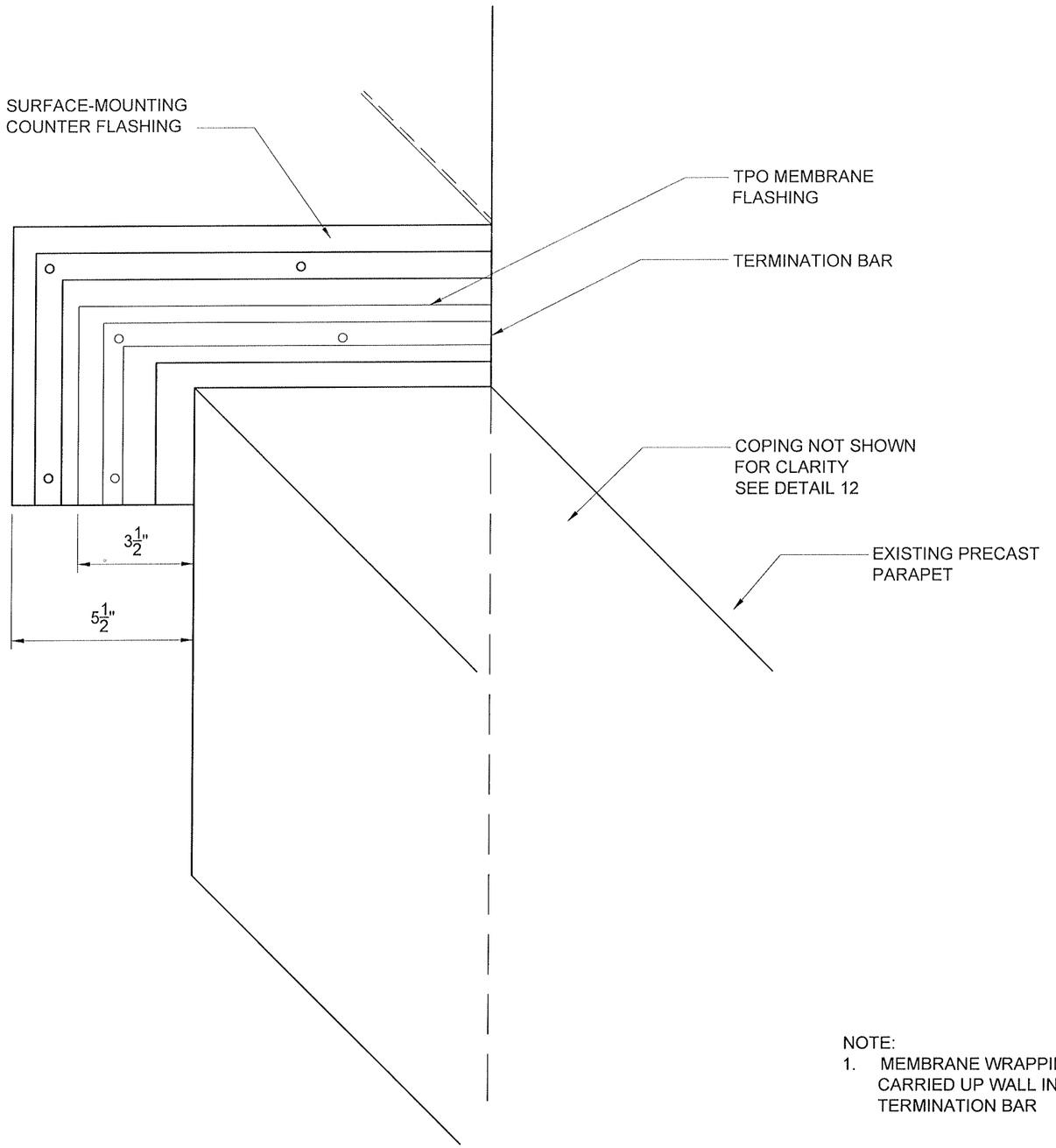

NOTE:
1. MEMBRANE WRAPPING PARAPET TO BE CARRIED UP WALL INTERFACE TO TERMINATION BAR

9 COPING TERMINATION DETAIL
SCALE: 3"=1'-0"

NORTH CAROLINA PROFESSIONAL SEAL 11102 ENGINEER JOHANN LUDWIG WILLERS

Johann Ludwig Willers REGISTERED ROOF CONSULTANT RCI 0008 RCI, Inc.

5/22/15

JOB NO.	14-069
SCALE:	AS NOTED
SHEET	12 OF 18
DRAWN BY:	ACS
CHECKED BY:	JW
DATE	5/22/15

ROOFTOP SYSTEMS ENGINEERS, P.C.
316 W. MILLBROOK ROAD, SUITE 201
RALEIGH, NC 27609-4482
NC License No. C-0807
919-872-7866; 919-872-4486 fax
www.rse-pc.com

9 Coping Termination Detail

ROOF REPLACEMENT AT THE
NCDOT DIVISION & TRAFFIC SERVICES OFFICE
558 GILLESPIE STREET
FAYETTEVILLE, NORTH CAROLINA
GL: 52199012,COST CENTER: 150538
SCO ID: 14-11317-01A

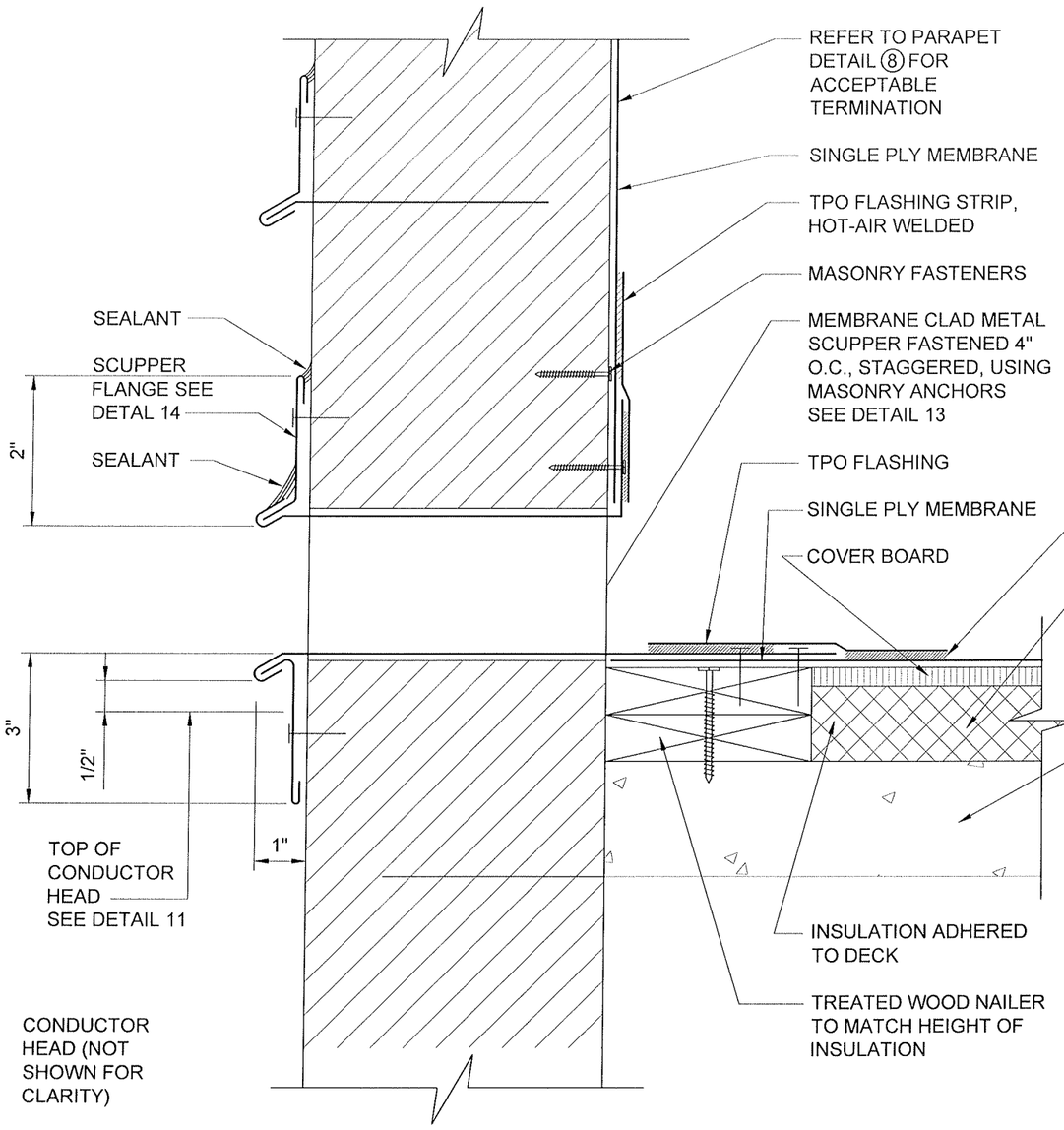

NOTES:
1. SEE ALSO DETAILS 10A & 10B

10 THRU-WALL SCUPPER
SCALE: 3"=1'-0"

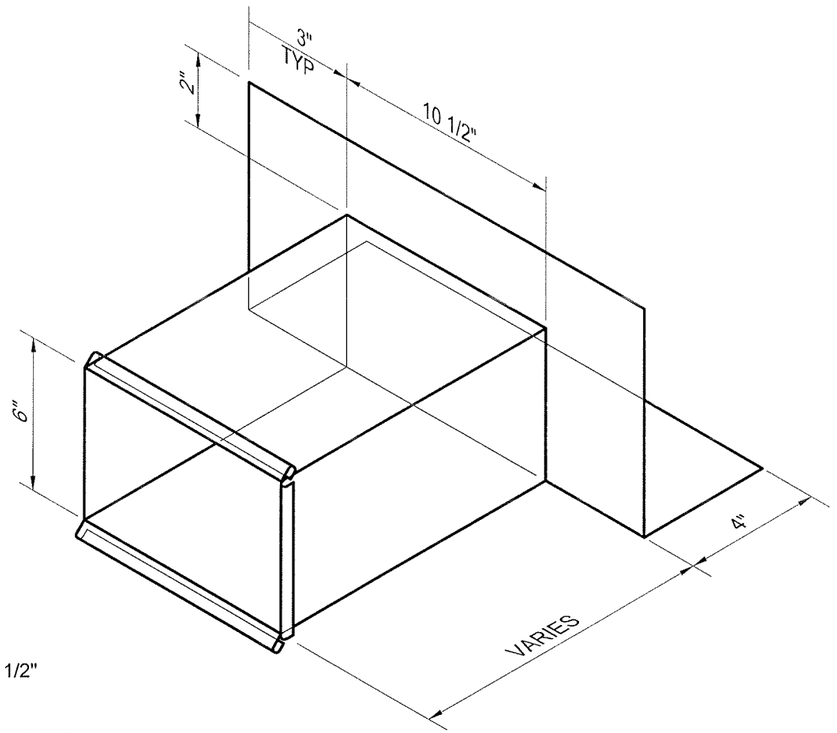

10A SCUPPER ISOMETRIC
SCALE: NONE

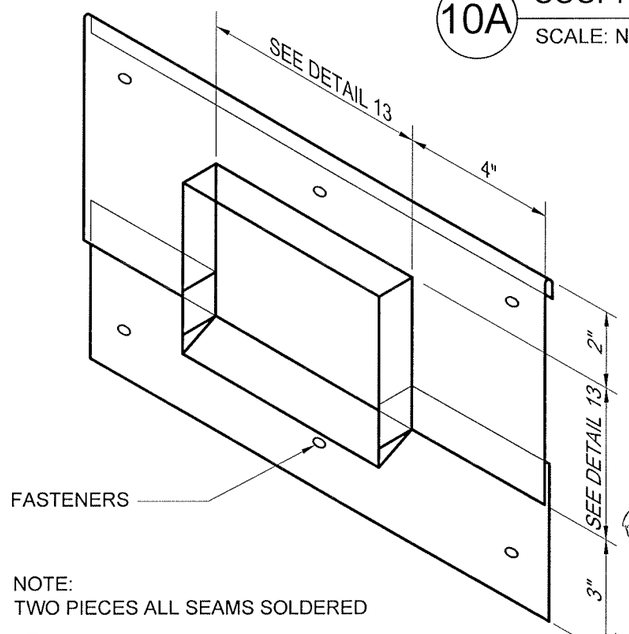

NOTE:
TWO PIECES ALL SEAMS SOLDERED

10B SCUPPER FLANGE
SCALE: NONE

Johann Ludwig Willers
REGISTERED ROOF CONSULTANT
RCI, Inc.
0008

NORTH CAROLINA PROFESSIONAL SEAL 11102 ENGINEER JOHANN LUDWIG WILLERS

5/22/15

ROOFTOP SYSTEMS ENGINEERS, P.C.
316 W. MILLBROOK ROAD, SUITE 201
RALEIGH, NC 27609-4482
NC License No. C-0807
919-872-7866; 919-872-4486 fax
www.rse-pc.com

DRAWN BY:	ACS
CHECKED BY:	JW
DATE	5/22/15
JOB NO.	14-069
SCALE:	AS NOTED
SHEET	13 OF 18

10 10A 10B Scupper Details

ROOF REPLACEMENT AT THE
NCDOT DIVISION & TRAFFIC SERVICES OFFICE
558 GILLESPIE STREET
FAYETTEVILLE, NORTH CAROLINA
GL: 52199012,COST CENTER: 150538
SCO ID: 14-11317-01A

5/22/2015 1:21:pm -- knaves -- C:\Users\knaves\appdata\local\temp\AcPublish_8948_448-486_Details.dwg

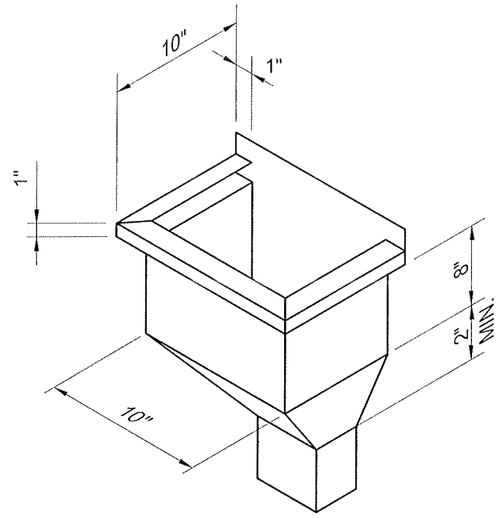

SMACNA FIGURE 1-25F
TYPICAL CONDUCTOR HEAD

11

SCALE: NONE

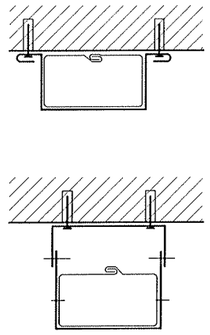

DOWNSPOUT SECUREMENT

11B

SCALE: NONE

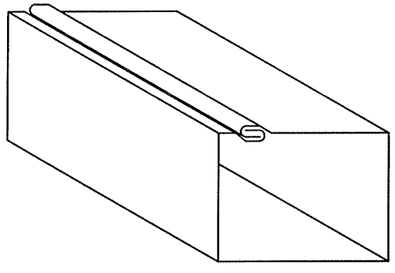

SMACNA FIGURE 1-32B
TYPICAL DOWNSPOUT

11A

SCALE: NONE

Johann Ludwig Willers
REGISTERED ROOF CONSULTANT
RCI
0008
RCI, Inc.

NORTH CAROLINA
PROFESSIONAL
SEAL
11102
ENGINEER
JOHANN LUDWIG WILLERS

5/22/15

11 11A 11B Downspout Details

ROOF REPLACEMENT AT THE
NCDOT DIVISION & TRAFFIC SERVICES OFFICE
558 GILLESPIE STREET
FAYETTEVILLE, NORTH CAROLINA
GL: 52199012,COST CENTER: 150538
SCO ID: 14-11317-01A

ROOFTOP SYSTEMS ENGINEERS, P.C.
316 W. MILLBROOK ROAD, SUITE 201
RALEIGH, NC 27609-4482
NC License No. C-0807
919-872-7866; 919-872-4486 fax
www.rse-pc.com

DRAWN BY: ACS
CHECKED BY: JW
DATE 5/22/15
JOB NO. 14-069
SCALE: NONE
SHEET 14 OF 18

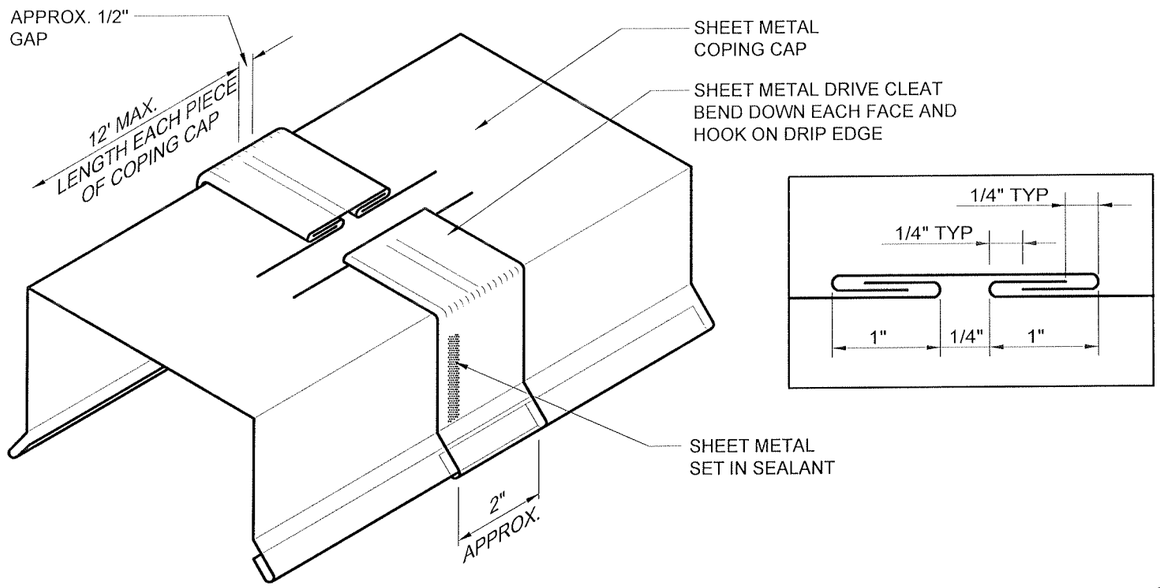

12 COPING CAP JOINTS
SCALE: NONE

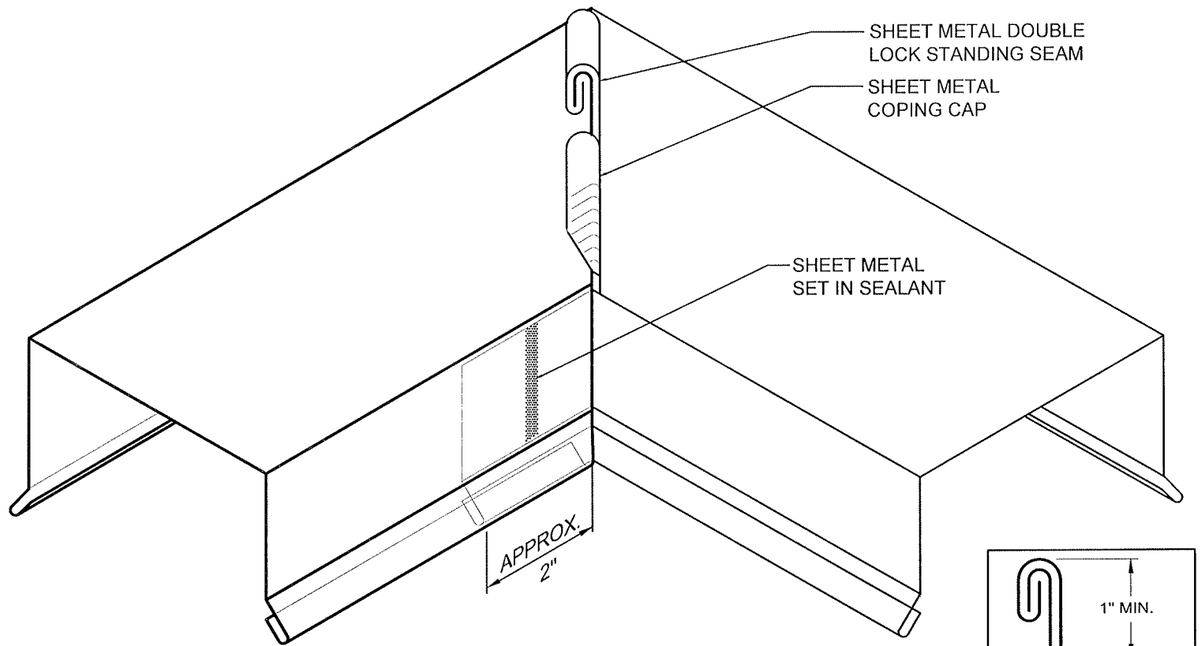

12A COPING CAP MITERS W/ DOUBLE LOCK STANDING SEAM
SCALE:NONE

Johann Ludwig Willers
REGISTERED ROOF CONSULTANT
RCI
0008
RCI, Inc.

NORTH CAROLINA PROFESSIONAL SEAL 11102 ENGINEER JOHANN LUDWIG WILLERS

5/22/15

DRAWN BY: ACS	JOB NO. 14-069
CHECKED BY: JW	SCALE: NONE
DATE 5/22/15	SHEET 15 OF 18

ROOFTOP SYSTEMS ENGINEERS, P.C.
316 W. MILLBROOK ROAD, SUITE 201
RALEIGH, NC 27609-4482
NC License No. C-0807
919-872-7866; 919-872-4486 fax
www.rse-pc.com

12 Coping Cap Joints 12A Coping Cap Miters

ROOF REPLACEMENT AT THE
NCDOT DIVISION & TRAFFIC SERVICES OFFICE
558 GILLESPIE STREET
FAYETTEVILLE, NORTH CAROLINA
GL: 52199012,COST CENTER: 150538
SCO ID: 14-11317-01A

05/22/2015 1:21pm - khayes - C:\Users\khayes\appdata\local\temp\AcPublish_8948__448-486_Details.dwg

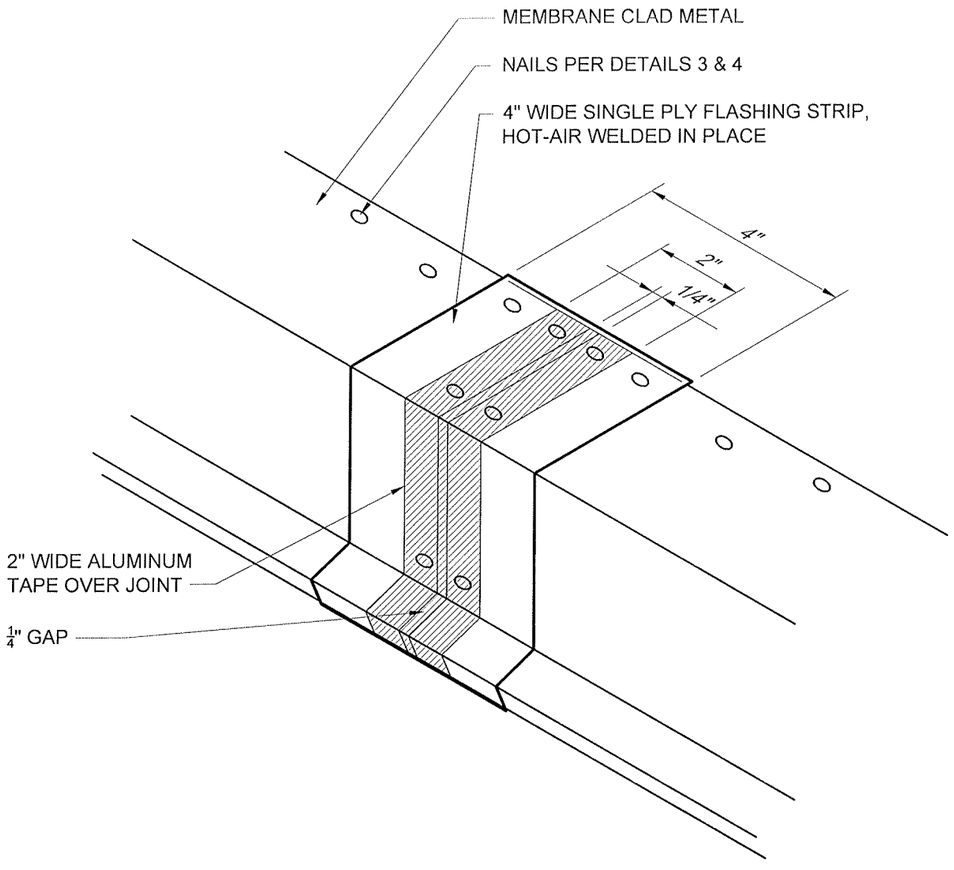

13 FLASHING CLAD METAL JOINTS

SCALE: NONE

SEE ALSO DETAIL 13A

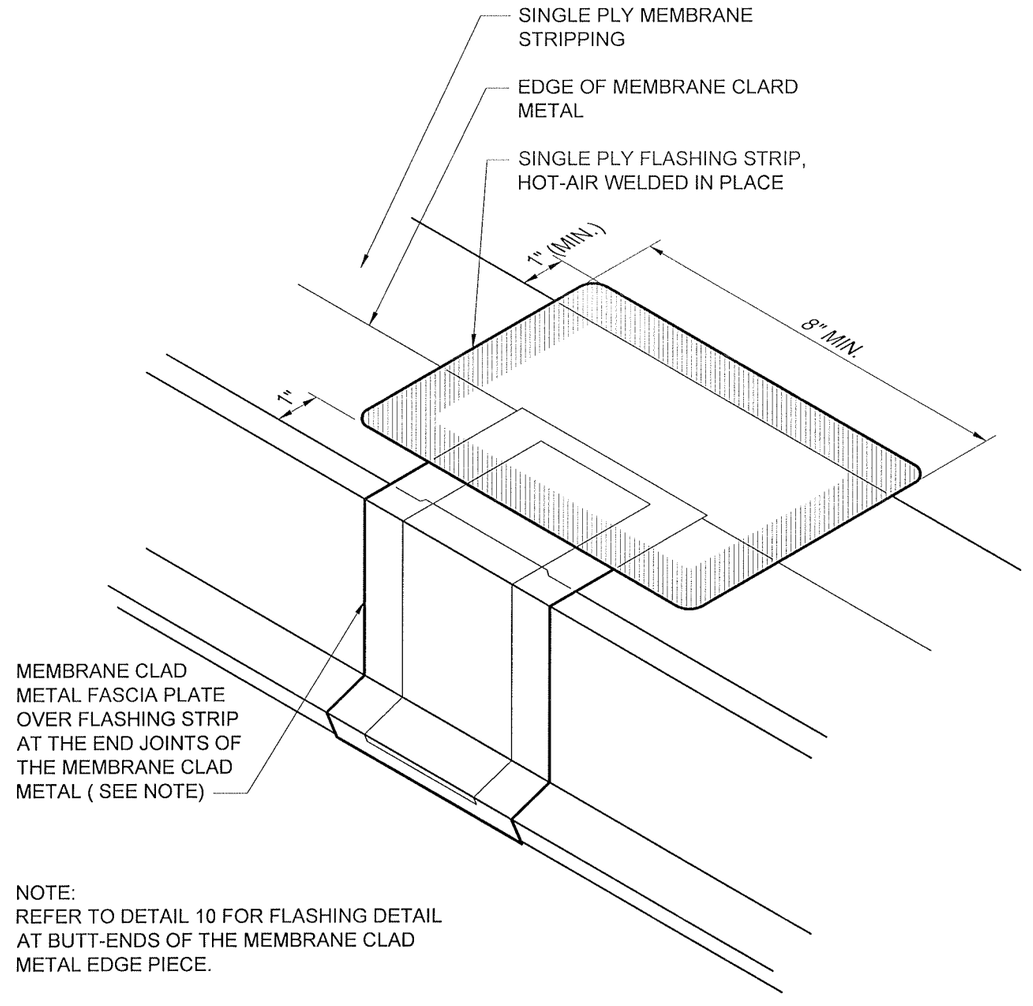

NOTE:
REFER TO DETAIL 10 FOR FLASHING DETAIL AT BUTT-ENDS OF THE MEMBRANE CLAD METAL EDGE PIECE.

13A MEMBRANE CLAD FASCIA PLATE AT METAL JOINTS

SCALE: NONE

SEE ALSO DETAIL 13

5/22/15

Johann Ludwig Willers
REGISTERED ROOF CONSULTANT
RCI
0008
RCI, Inc.

NORTH CAROLINA
PROFESSIONAL
SEAL
11102
ENGINEER
JOHANN LUDWIG WILLERS

ROOFTOP SYSTEMS ENGINEERS, P.C.
316 W. MILLBROOK ROAD, SUITE 201
RALEIGH, NC 27609-4482
NC License No. C-0807
919-872-7866; 919-872-4486 fax
www.rse-pc.com

DRAWN BY:	CHECKED BY:	DATE
ACS	JW	5/22/15

JOB NO.	SCALE:	SHEET	OF
14–069	NONE	16	18

13 13A Metal Joint Details

ROOF REPLACEMENT AT THE
NCDOT DIVISION & TRAFFIC SERVICES OFFICE
558 GILLESPIE STREET
FAYETTEVILLE, NORTH CAROLINA
GL: 52199012,COST CENTER: 150538
SCO ID: 14-11317-01A

5/22/2015 12:12:pm - C:\Users\kevin\Documents\Projects\NCDOT-Miller 8948\ 448 486 Details.dwg

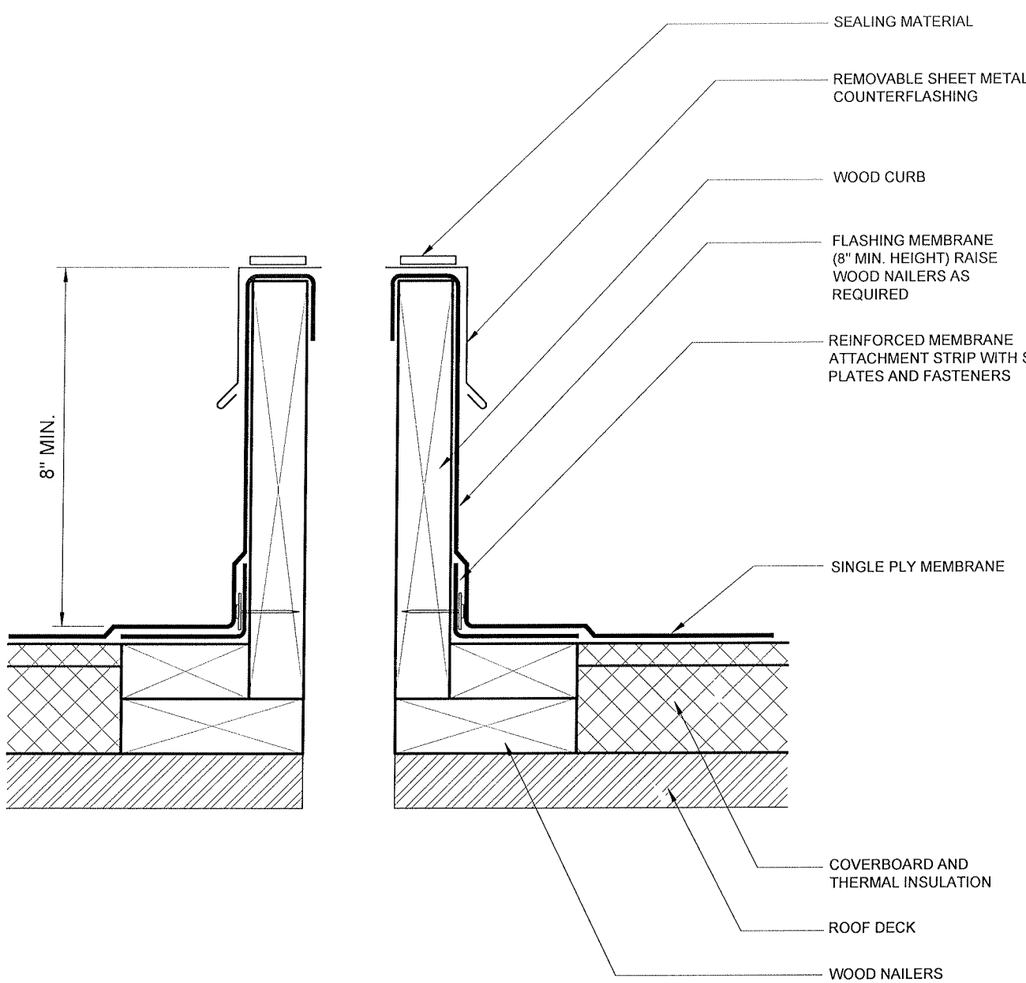

NOTES:

1. THE MECHANICAL UNITS SHOULD NOT BE SET UNTIL THE ROOF MEMBRANE AND FLASHING HAVE BEEN INSTALLED.

14 CURB DETAIL

SCALE: NONE

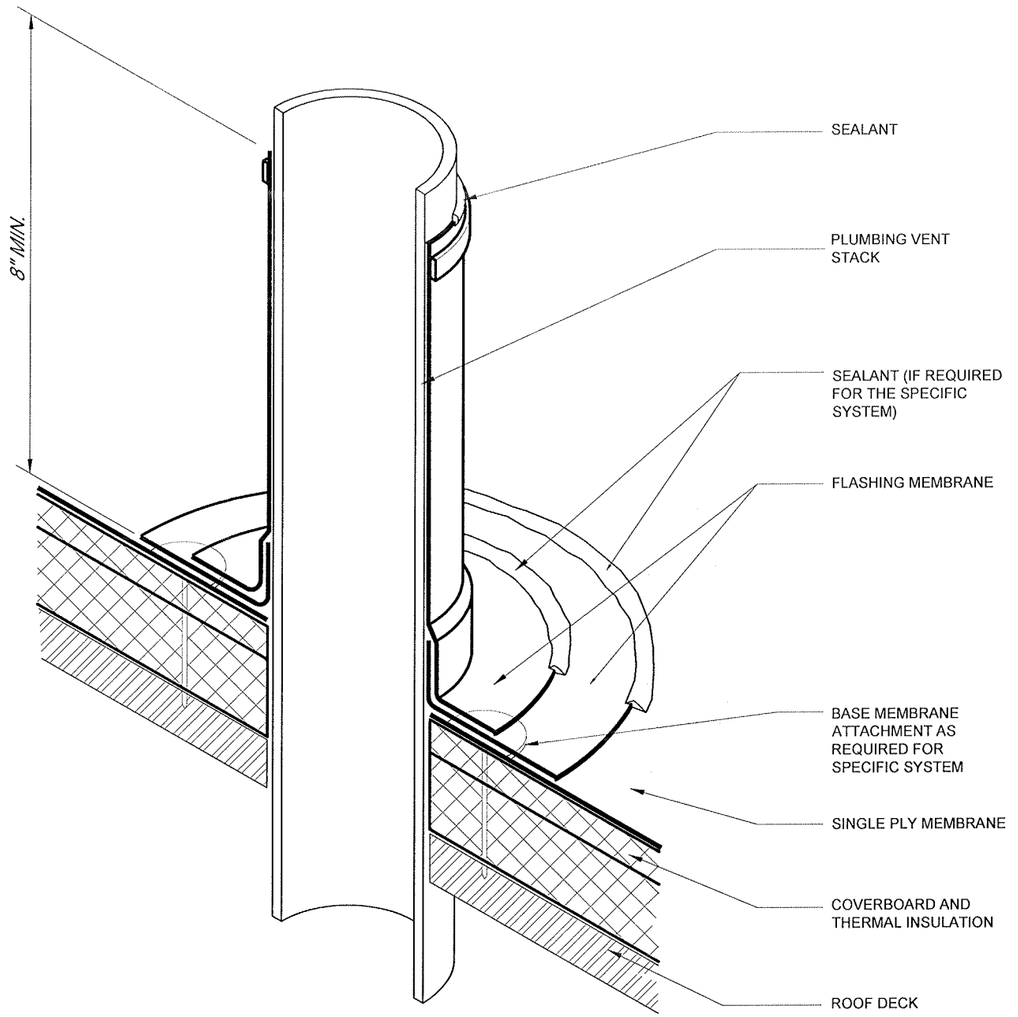

NOTES:

1. VENT STACKS AND OTHER PIPES SHOULD HAVE A MINIMUM OF 12 INCHES OF CLEARANCE ON ALL SIDES FROM WALLS, CURBS, AND OTHER PROJECTIONS TO FACILITATE PROPER FLASHING.

15 VENT STACK FLASHING

SCALE: NONE

Johann Ludwig Willers
REGISTERED ROOF CONSULTANT
RCI
NORTH CAROLINA
PROFESSIONAL
SEAL
11102
ENGINEER
JOHANN LUDWIG WILLERS

5/22/15

JOB NO.	14-069
SCALE:	NONE
SHEET	17 OF 18
DRAWN BY:	ACS
CHECKED BY:	JW
DATE	5/22/15

14 Curb Detail 15 Vent Stack Flashing

ROOF REPLACEMENT AT THE
NCDOT DIVISION & TRAFFIC SERVICES OFFICE
558 GILLESPIE STREET
FAYETTEVILLE, NORTH CAROLINA
GL: 52199012,COST CENTER: 150538
SCO ID: 14-11317-01A

ROOFTOP SYSTEMS ENGINEERS, P.C.
316 W. MILLBROOK ROAD, SUITE 201
RALEIGH, NC 27609-4482
NC License No. C-0807
919-872-7866; 919-872-4486 fax
www.rse-pc.com

05/22/2015 1:21pm - knoves - C:\Users\knoves\appdata\local\temp\AcPublish_8948\448-486_Details.dwg

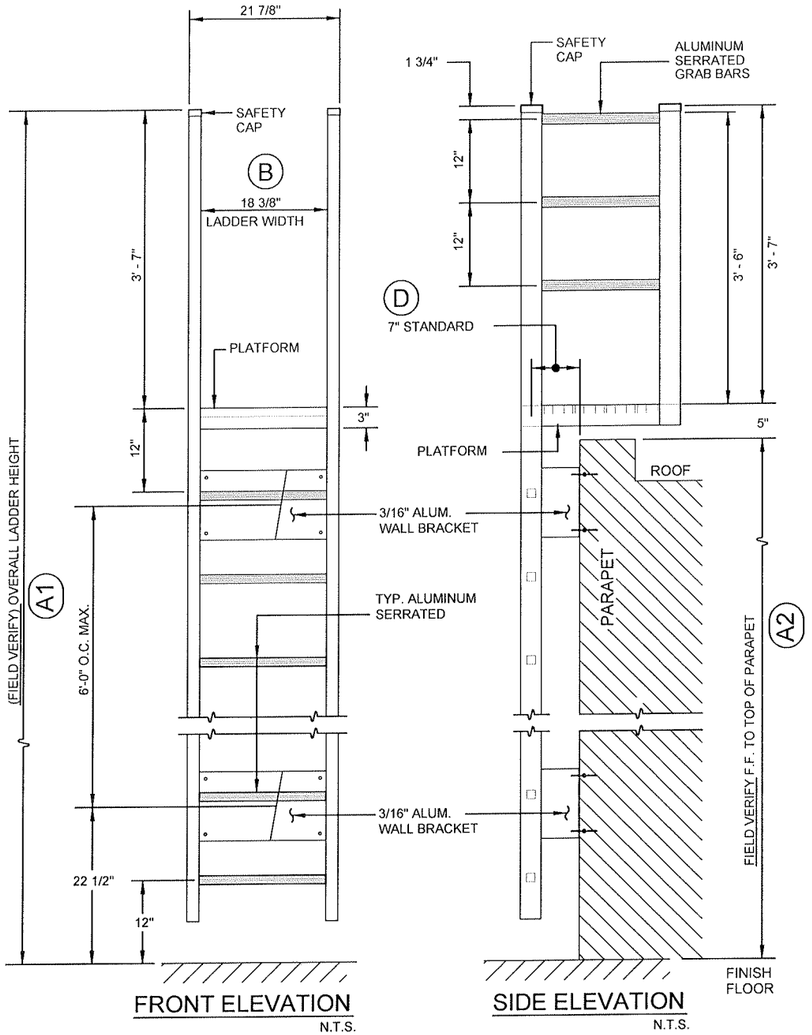

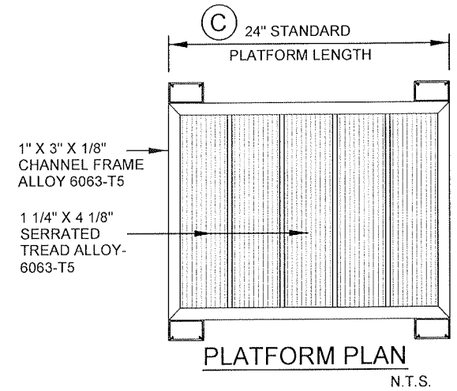

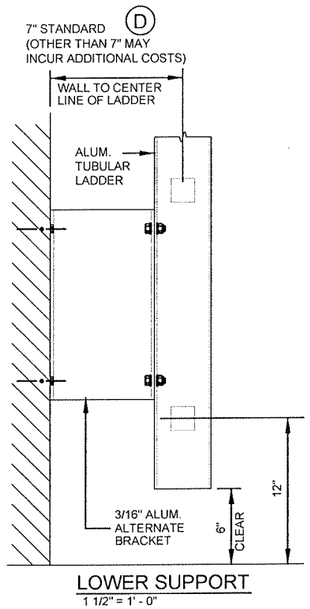

16 ROOF LADDER

SCALE:AS NOTED

JOB NO.	14-069
SCALE:	AS NOTED
SHEET	18 OF 18
DRAWN BY:	ACS
CHECKED BY:	JW
DATE	5/22/15

ROOFTOP SYSTEMS ENGINEERS, P.C.
316 W. MILLBROOK ROAD, SUITE 201
RALEIGH, NC 27609-4482
NC License No. C-0807
919-872-7866; 919-872-4486 fax
www.rse-pc.com

16 Roof Ladder

ROOF REPLACEMENT AT THE
NCDOT DIVISION & TRAFFIC SERVICES OFFICE
558 GILLESPIE STREET
FAYETTEVILLE, NORTH CAROLINA
GL: 52199012,COST CENTER: 150538
SCO ID: 14-11317-01A

05/22/2015 2:21pm - C:\Users\kreyes\Desktop\temp\McPuiller_8948__448-486 Details.dwg